LG
Life's Good

OWNER'S MANUAL

LG Digital Signage

(MONITOR SIGNAGE)

Please read this manual carefully before operating your set and retain it for future reference.

55XE3C
75XE3C

www.lg.com

Copyright © 2018 LG Electronics Inc. All Rights Reserved.

ENGLISH

TABLE OF CONTENTS

SAFETY PRECAUTION 3

- Precautions When Installing the Product.....3
- Precautions for the AC Adapter and Power 5
- Precautions When Moving the Product.....6
- Precautions When Using the Product.....7
- Precautions When Cleaning the Product 8
- Precautions When Experiencing Image Sticking 9
- Precautions When Using the Remote Control .9

LICENSES..... 10

ASSEMBLY AND PREPARATION 11

- Product Contents.....12
- Installing in Landscape Orientation.....13
- Installing on a Wall.....14

REMOTE CONTROL 15

MAKING CONNECTIONS..... 17

- Connecting to a PC.....17
- External Device Connection.....17
- To Connect External Devices.....19
- Using the Input List 21

TROUBLESHOOTING..... 22

PRODUCT SPECIFICATIONS..... 26

WARNING - This equipment is compliant with Class A of CISPR 32. In a residential environment this equipment may cause radio interference.

SAFETY PRECAUTION

The Safety Precautions are intended to prevent unexpected danger or harm by helping the user to use the product safely and for its intended purpose.

WARNING

If you ignore the warning message, you may be seriously injured or there is a possibility of accident or death.

CAUTION

If you ignore the caution message, you may be slightly injured or the product may be damaged.

Precautions When Installing the Product

WARNING

Failure to observe these warnings may result in serious injury or death.

- Do not place the product close to heat sources such as fires and stoves.
  - There is a risk of fire.
- Do not hang from or climb on the product.
  - You may fall and cause injury.
- Do not install the product in a damp or dusty area.
  - This may create a fire hazard or result in electric shock or damage to the product.
- If the product has been dropped or its case is damaged, turn off the power and unplug the power cord from the power outlet.
  - Otherwise, the product may cause fire or electric shock. Contact the service center.
- Do not drop the product, subject it to shock, or throw any objects at the product screen.
  - This may result in damage to the screen, malfunction of the product, or personal injury.
- When there is smoke or a strange smell or sound emitting from the product, disconnect the power cord and then contact the service center.
  - Otherwise, the product may cause fire or electric shock.
- Do not leave the power or signal cable, etc. in walkways.
  - If you step on or fall over the cable, it may cause fire, electric shock, product damage or personal injury.
- Keep the anti-moisture material or vinyl film used for packaging the product out of reach of children.
  - If swallowed by mistake, force it to be vomited and visit the nearest hospital as a matter of urgency.

- Be careful when installing the product where it is likely to get wet, such as in a bathroom or other locations exposed to rain or water.
  - This may cause fire, electric shock or product malfunction.
- Do not insert pieces of metal, such as coins, hairpins and metal debris, or flammable materials, such as paper or matches, into the product.
  - Doing so may cause fire or result in electric shock. If foreign materials fall into the product, disconnect the power cord and then contact the service center.
- Do not install the product by yourself. The product should be installed by a professional installation technician specified by the retail store.
  - Product installation by a non-professional installation technician is very dangerous and may cause personal injury.
- Do not install the product onto a wall that is close to sources of oil or oil mist.
  - Otherwise, it may result in damage to the product and cause the product to fall.

⚠ CAUTION

Failure to observe these instructions may result in minor injury or damage to the product.

- Set to [Screen OFF & Backlight (Outdoor Mode)] when installing outdoors.
  - Enable the [Outdoor Mode] to reduce the risk of the internal humidity and condensation.
  - When operating in below zero temperature, the enclosure may not work for up to one hour to raise the internal temperature of the enclosure.
- Ensure that the product is installed a certain distance (at least 100 mm) away from the wall for good ventilation.
  - Failure to do so may result in the deformation of the product or fire due to the increase in the internal temperature.
- When placing the product on a table or shelf, be careful not to place it on the edge.
  - The product may fall, causing personal injury or damage to the product. Make sure to use a table or stand that fits the product.
- Do not place the product close to sources of steam or oil, such as humidifiers and kitchen counters.
  - This may result in electric shock or fire.
- Make sure the air vents are not blocked by a tablecloth or curtain.
  - Failure to do so may result in the deformation of the product or fire due to the increase in the internal temperature.
- Do not install the product in an area with poor ventilation (e.g. on a bookshelf, in a closet, in separate outdoor structures), and avoid placing on cushions or carpets.
  - This could result in fire due to high internal temperature.
- Do not place the product on an unstable or vibrating surface such as a vibrating shelf or tilted surface.
  - The product may fall or flip over and cause injury.
- Do not install the product in a place with electromagnetic interference.
- In addition, do not install it in close proximity to hot objects, such as lights.

If you install the product in unusual locations that do not meet the general conditions, this may cause serious damage to the product's picture quality, life cycle or appearance. Please check with our service engineers before installing in such locations.

Unusual locations: Locations where much fine dust or oil mist is generated, locations where chemical substances are used, locations where the temperature is too high or low and other locations where the product was not meant to be used.

Precautions for the AC Adapter and Power

WARNING

Failure to observe these warnings may result in serious injury or death.

- If water or any foreign substance enters the product (TV, device, power cord or AC adapter), disconnect the power cord immediately and contact the service center.
  - Otherwise, the damage to the product may cause a fire or electric shock.
- Always connect the power cord to a grounded outlet.
  - Failure to do so may result in electric shock or personal injury.
- Do not touch the power cord or the signal cable in the event of thunder and lightning.
  - There is risk of electric shock.
- Do not touch the power plug or AC adapter with wet hands. If the pins of the plug are wet or dusty, wipe or dry them thoroughly before use.
  - Failure to do so may cause electric shock or fire.
- Insert the power plug securely so that it does not come loose. Do not use the product if the power outlet is loose.
  - A bad connection may cause a fire or electric shock.
- Make sure the power cord is fully inserted into the AC adapter.
  - If loose, the poor connection may cause a fire or electric shock.
- Do not insert a conductor such as a chopstick into the other side of the cord while the power cord is inserted into the wall outlet. Also, avoid touching the power plug immediately after pulling it out of the wall outlet.
  - This may cause electric shock.
- Be sure to use power cords and AC adapters provided or approved by LG Electronics, Inc.
  - The use of non-approved products may cause fire or electric shock.
- Use the product at the rated voltage only.
  - Failure to do so may result in damage to the product or electric shock.
- Do not use with a multi-outlet shared with many devices. Use a dedicated multi-outlet with a ground terminal.
  - Otherwise, this may result in fire due to excessive heat.
- Disconnect the power cable when the product is not used for a long period of time.
  - Dust may accumulate, resulting in electrical short circuits, electric shock or fire due to overheating, combustion or insulation degradation.
- When unplugging the power cord, always pull it by the plug. Do not bend the power cord with excessive force.
  - A damaged cable may result in electric shock or fire.
- Be careful not to step on or place heavy objects (electronic appliances, clothing, etc.) on the power cord or AC adapter. Be careful not to damage the power cord or AC adapter with sharp objects.
  - Damaged power cords may cause a fire or electric shock.
- Never disassemble, repair or modify the power cord or AC adapter.
  - This may cause a fire or electric shock.
- To turn off the main power, remove the power cord, which should be positioned so it is easy to access for operation.
- If the product is connected to an AC wall outlet, it will not be disconnected from the AC power source even if you turn off the switch.
- Power consumption will be ‘0’ only when the power plug is unplugged.

⚠ CAUTION

Failure to observe these instructions may result in minor injury or damage to the product.

- Do not remove the power cord when the product is in use.
  - Otherwise, the product may be damaged due to the sudden loss of power.
- Be sure to keep the outlet, AC adapter and pins of the power plug clean from dust, etc.
  - Failure to do so may cause fire.
- Do not turn the product on or off by plugging in or unplugging the power plug from the power outlet. (Do not use the power plug as a switch.)
  - This may cause an electric shock or product malfunction.
- Keep the power cord away from any heating devices.
  - The cord coating may melt and cause fire or electric shock.

Precautions When Moving the Product

⚠ WARNING

Failure to observe these warnings may result in serious injury or death.

- Before moving the product, disconnect the power cord and all other cables connected.
  - Otherwise, this may result in electric shock or product damage.
- When carrying the product, make sure the screen faces forward and hold it firmly in both hands.

⚠ CAUTION

Failure to observe these instructions may result in minor injury or damage to the product.

- Do not discard the delivery box with the original packaging.
  - Put the product in the box when carrying it.
- Lifting, moving or unpacking the product require at least two people due to the weight of the product.
  - Failure to do so may result in damage to the product or personal injury. Using the fallen product again may result in electric shock or fire. Contact the service center.

Precautions When Using the Product

WARNING

Failure to observe these warnings may result in serious injury or death.

- Do not disassemble, repair or modify the product by yourself.
  - Otherwise, the product may cause fire or electric shock. If the product needs to be checked, adjusted or repaired, contact the service center.
- Do not allow water to get into the product and do not let the product get wet.
  - Failure to do so may result in fire, electric shock, malfunction or deformation.
- If there is a gas leak, do not touch the power outlet, and open the windows for ventilation.
  - Otherwise, the product may cause fire or electric shock.
- Do not impact the front or sides of the screen with a hard object, such as a metal object, and do not scratch the screen.
  - This can result in damage to the screen.
- In the event that liquid or a foreign object falls into the product, please switch it off and unplug it from the wall outlet and contact the service center.
  - Otherwise, the product may cause fire or electric shock.
- Make sure that children do not swallow the remote control batteries when you replace them. Keep batteries out of reach of children.
  - If a child swallows a battery, consult a doctor immediately.
- In the event that no image appears on the screen or no sound is heard, stop using the product. Switch it off immediately, unplug it from the power outlet and contact the service center.
  - Otherwise, the product may cause fire or electric shock.
- Do not use the product in any environment with excessively high temperatures or humidity.
- Using headsets (earphones) for a long time or listening at high volume can cause damage to your hearing.
- Do not use high-voltage electrical products near the device. This may result in device malfunction due to electric shock. (e.g. electric mosquito swatters)
- If the enclosure has been damaged, consult the service center. There is a risk of electric shock or personal injury.

⚠ CAUTION

Failure to observe these instructions may result in minor injury or damage to the product.

- Do not use or store the product near inflammables.
  - This may result in fire or explosion.
- Take a break to protect your health and vision when using the product for long periods of time.
- Displaying a still image for a prolonged time may cause damage to the screen, resulting in image sticking.
  - Damage incurred as a result of the above is not covered by the product warranty.
- Do not push hard on or scratch the product's surface with your hands or sharp objects, such as nails, pencils or pens.
  - This may damage the product's surface and cause it to malfunction.
- Keep the product clean.
- Refer to the user guide and set the product to a fitting resolution and frequency. (For models with PC support only)
  - You may experience blurred vision.
- Because the LCD requires high technology consisting of millions of pixels, pixilated spots (red, green, white or black) may appear on the screen in some cases while using the product.
  - This is normal for an LCD screen and is not a malfunction, nor is this related to the product's performance.
- Do not leave the product in places where it is likely to get wet, and do not place anything containing liquid on top of the product such as a flower vase.
- To clean the front frame, spray water onto a soft cloth two to four times; wipe in one direction only.
  - Too much moisture may cause staining.

Precautions When Cleaning the Product

⚠ WARNING

Failure to observe these warnings may result in serious injury or death.

- Do not spray water directly onto the product and do not use inflammable materials such as thinner or benzene to wipe the product.
  - Doing so may cause fire or result in electric shock.

⚠ CAUTION

Failure to observe these instructions may result in minor injury or damage to the product.

- To clean the product, unplug the power cord and wipe it gently with a soft cloth.

  When cleaning the product or the screen, do not use cleanser, automobile or industrial shiner, abrasive or wax, benzene, alcohol, etc., as this may damage the product.
  - This may result in fire, electric shock or product damage (deformation, corrosion or breakage).

Precautions When Experiencing Image Sticking

- Displaying a still image for a prolonged period of time may cause damage to the screen, resulting in image sticking.
- Use a screen saver when using the monitor for a prolonged period of time.
- Most third-party products have the same issue. The resulting damage is not covered by the product warranty.

Precautions When Using the Remote Control

⚠ CAUTION

Failure to observe these instructions may result in minor injury or damage to the product.

- Remove any obstacles.
- The remote control may not function properly in sunlight or under a strong lamp. Move the product if it is being used in these conditions.
- Only use the specified type of battery. Do not insert batteries that are not rechargeable into the charger.
  - Burst or leaking batteries may cause fire or electric shock.
- Avoid locations near heaters or locations with high humidity.
- Do not mix new batteries with old ones.
  - Burst or leaking batteries may cause fire or electric shock.
- Do not expose the batteries to excessive heat. Keep them away from direct sunlight, fireplaces, electric heaters, etc.

LICENSES

Supported licenses may differ by model. For more information of the licenses, visit *www.lg.com*.

The terms HDMI and HDMI High-Definition Multimedia Interface, and the HDMI Logo are trademarks or registered trademarks of HDMI Licensing Administrator, Inc. in the United States and other countries.

Manufactured under license from Dolby Laboratories. Dolby, Dolby Vision, Dolby Audio, Dolby Atmos, and the double-D symbol are trademarks of Dolby Laboratories.

For DTS patents, see *http://patents.dts.com*. Manufactured under license from DTS Licensing Limited. DTS, the Symbol, & DTS and the Symbol together, DTS 2.0 Channel, DTS 2.0+Digital Out, DTS-HD, and DTS Virtual:X are registered trademarks or trademarks of DTS, Inc. in the United States and/or other countries. © DTS, Inc. All Rights Reserved.

ASSEMBLY AND PREPARATION

CAUTION

- Always use genuine components to ensure safety and product performance.
- The product warranty will not cover damage or injury caused by the use of counterfeit components.

NOTE

- The accessories provided with your product may vary depending on the model or region.
- Product specifications or contents in this manual may be changed without prior notice due to upgrade of product functions.
- SuperSign Software & Manual
  - Downloading from the LG Electronics website.
  - Visit the LG Electronics website (*http://partner.lge.com*) and download the latest software for your model.
- The warranty will not cover any damage caused by using the product in an excessively dusty environment.

Product Contents

The image may be different according to the model.

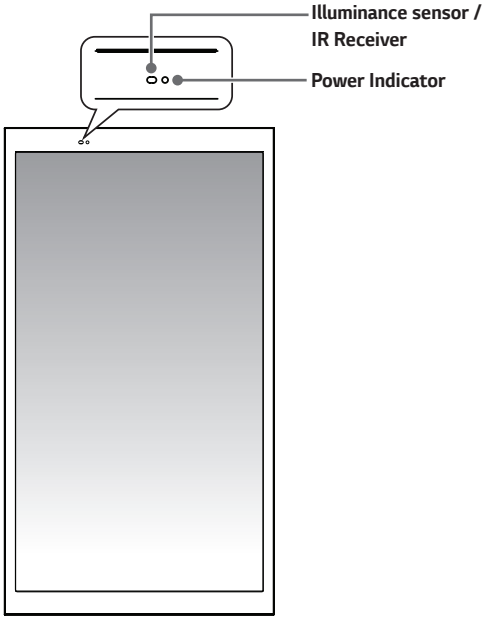

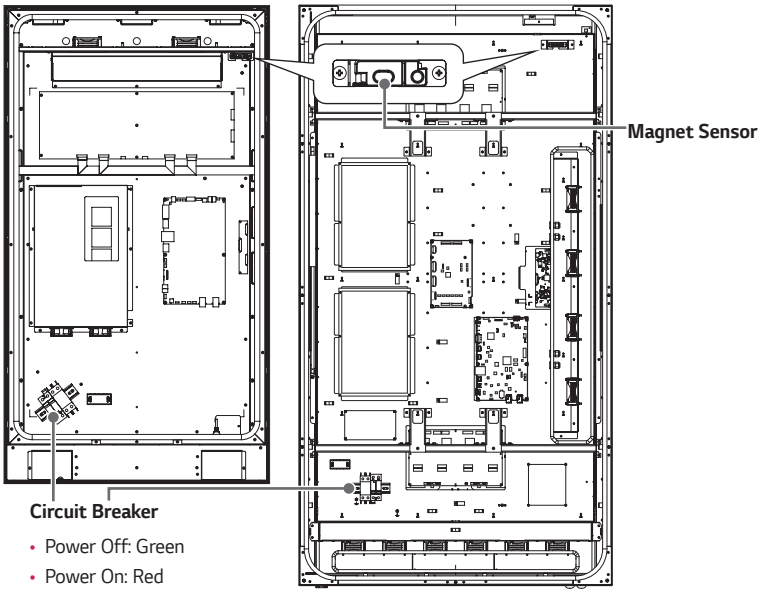

- Power Off: Green
- Power On: Red

* This image shows the product with the back cover off.

Installing in Landscape Orientation

To install in landscape orientation, rotate the screen counterclockwise 90 degrees while facing it from the front.

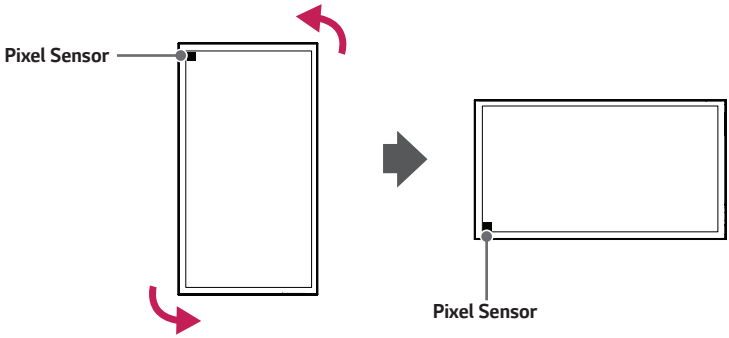

NOTE

- The 75XE3C does not support installation in landscape orientation.

Installing on a Wall

For proper ventilation, make sure the product is installed at least 100 mm away from the walls on every side. Consult a professional installation company near you for details on installation.

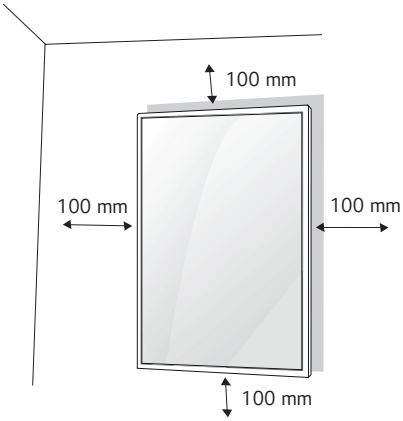

Use the side screw holes when mounting the panel.

- Side screw hole
  - 55XE3C : M8, Torque - 17 Kgf to 27 Kgf (Bottom side: 8 holes, Left, Right Sides: each of 4 holes)
  - 75XE3C : M10, Torque - 17 Kgf to 27 Kgf (Bottom side: 10 holes, Left, Right Sides: each of 4 holes)
- Please use the 18.0 mm to 25.0 mm screws.

CAUTION

- Disconnect the power cord before moving or installing the monitor to avoid risk of electric shock.
- If you install the monitor on a ceiling or slanted wall, it may fall and result in injury. The product should be installed by a professional installation company specified by the retail store.
- Do not over tighten the screws as this may damage the monitor and void your warranty.
- Any damage or injuries caused by misuse or use of improper accessories are not covered by the warranty.
- To prevent injury, this apparatus must be securely attached to the wall in accordance with the installation instructions. (This pertains only to Australia and New Zealand.)

NOTE

- Be sure to use the correct length.

REMOTE CONTROL

The descriptions in this manual are based on the buttons on the remote control. Please read this manual carefully to use the monitor correctly. To install batteries, open the battery cover, place batteries (1.5 V AAA) matching ⊕ and ⊖ terminals to the labels inside the compartment, and close the battery cover. To remove the batteries, perform the installation actions in reverse. The illustrations may differ from the actual accessories.

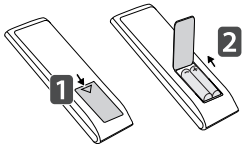

⚠ CAUTION

- Do not mix old and new batteries, as this may damage the remote control.
- Be sure to point the remote control toward the remote control sensor on the monitor.
- Some features of the remote control may not be supported in certain models.

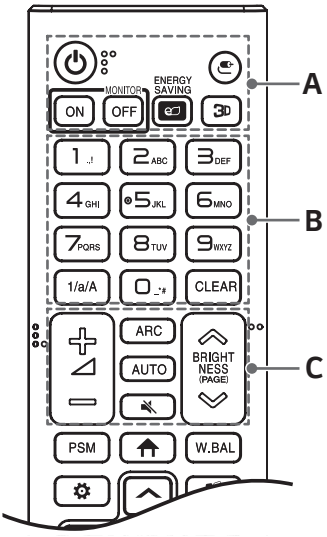

A

⏻ **(POWER)** Turns the monitor on or off.

MONITOR ON Turns the monitor on.

MONITOR OFF Turns the monitor off.

ENERGY SAVING Adjusts the brightness of the picture to reduce energy consumption.

(INPUT) Selects the input mode.

3D Used for viewing 3D videos.

B

1/a/A Toggles between numerical and alphabetical.

Number and Alphabet buttons Enters numerical or alphabetical characters depending upon the setting.

CLEAR Deletes the entered numerical or alphabetical character.

C

Volume Up/Down Button Adjusts the volume.

ARC Selects the Aspect Ratio mode.

AUTO Automatically adjusts picture position and minimizes image instability (available for RGB input only).

(MUTE) Mutes all sounds.

BRIGHTNESS Adjusts the brightness of the display. PAGE function is not supported in this model.

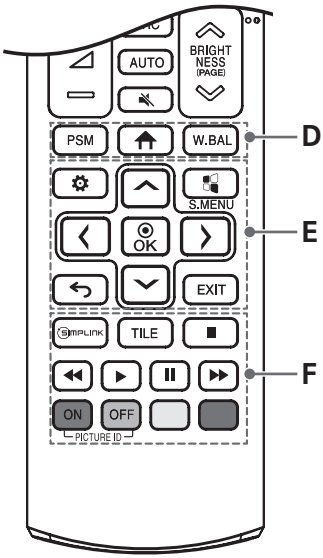

D

PSM Selects the Picture Mode.

(HOME) Activates the Launcher.

W.BAL Enters the White Balance menu.

E

(SETTINGS) Accesses the main menus or saves your input and exit menus.

S.MENU SuperSign menu key.

Navigation Buttons Scrolls through menus or options.

OK Selects menus or options and confirms your input.

(BACK) Allows you to move back one step in the user interaction function.

EXIT Quit all OSD tasks and applications.

F

SIMPLINK Allows you to control various multimedia devices to enjoy multimedia simply by using the remote control through the SimpLink menu.

TILE Selects the TILE Mode.

PICTURE ID ON/OFF When the Picture ID number matches the Set ID number, you can control whichever monitor you want in multi-display format.

USB Menu Control Buttons Controls media playback.

MAKING CONNECTIONS

You can connect various external devices to your monitor. Change the input mode and select the external device you want to connect.

For more information about external device connections, see the user manual provided with each device.

Connecting to a PC

Some of the cables are not provided.

This monitor supports the Plug and Play* feature.

* Plug and Play: a feature that enables a PC to recognize devices attached by the user without device configuration or user intervention when powering up.

External Device Connection

Connect a HD receiver, DVD, or VCR player to the monitor and select an appropriate input mode.

Some of the cables are not provided. For the best picture and sound quality, connecting external devices to your monitor using HDMI cables is recommended.

NOTE

- For the best image quality, using the monitor with HDMI connection is recommended.
- To comply with the standard specifications of the product, use a shielded interface cable with a ferrite core, such as a DVI-D cable.
- If you turn the monitor on when the set is cold, the screen may flicker. This is normal.
- Sometimes red, green, or blue spots may appear on the screen. This is normal.
- Use a High Speed HDMI®/™ cable (shorter than 3 meters).
- Use a certified cable with the HDMI logo attached. If you do not use a certified HDMI cable, the screen may not display or a connection error may occur.
- Recommended HDMI Cable Types
  - High-Speed HDMI®/™ Cable
  - High-Speed HDMI®/™ Cable with Ethernet
- If you cannot hear any sound in HDMI mode please check your PC settings. Some PCs require you to manually change the default audio output to HDMI.
- If you want to use HDMI-PC mode, you must set your PC/DTV to PC mode.
- You may experience compatibility issues if you use HDMI-PC mode.
- Make sure the power cable is disconnected.
- If you connect a gaming device to the monitor, use the cable provided with the gaming device.
- High Speed HDMI®/™ cables transmit a HD signal up to 1080p and higher.

CAUTION

- Connect the signal input cable and tighten it by turning the screws clockwise.
- Do not press the screen with your finger for a prolonged period as this may result in temporary distortion on the screen.
- Avoid displaying static images on the screen for a long period of time to prevent image retention. Use a screensaver if possible.
- A wireless communication device near your monitor can affect the image.

To Connect External Devices

When Installing a Media Player Internally

- 55XE3C

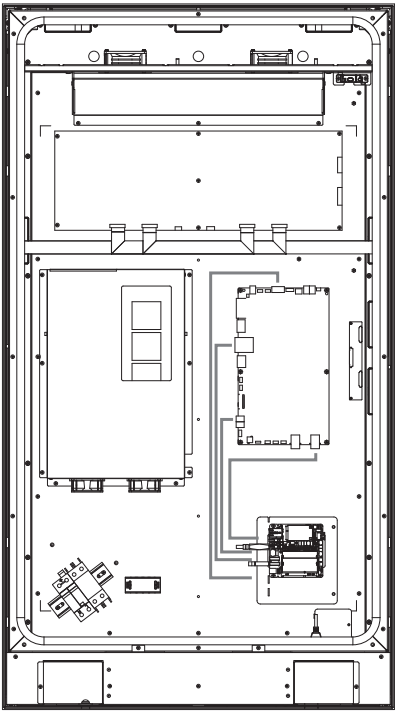

- 75XE3C

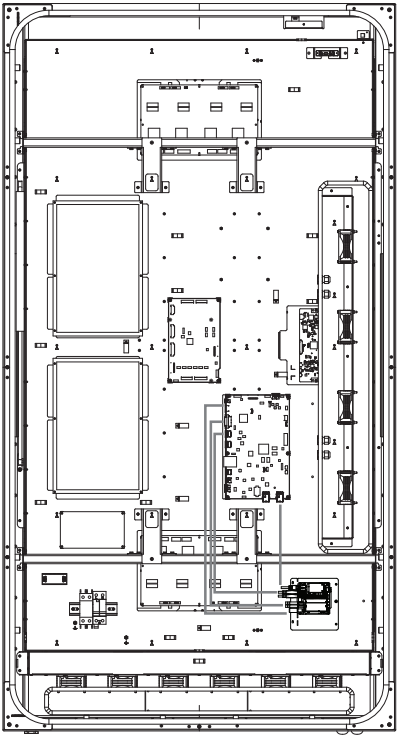

When Installing a Media Player/PC Externally

- 55XE3C

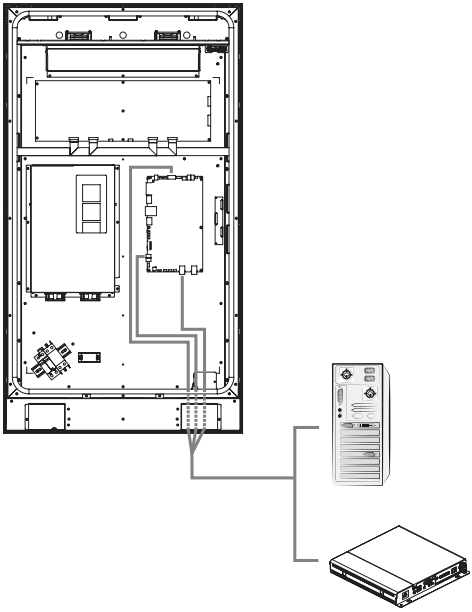

- 75XE3C

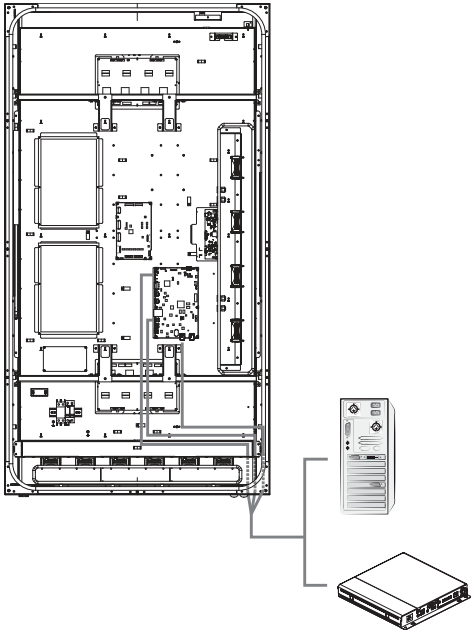

NOTE

- If you set the tile mode using DVI-D or HDMI, you will not be able to watch HDCP-encrypted content.
- If the signal cable between the product and your PC is too long, make sure to use the Booster or optical cable.
- DP Cable - Use a DP cable that is certified to DP 1.1a standard or higher.
- When installing a media player/PC externally, you can only connect HDMI IN, USB 3.0 IN and LAN.

Using the Input List

(HOME) →

- HDMI → DVI-D → DISPLAYPORT

TROUBLESHOOTING

No image is displayed.

Problem	Action
Is the product power cord connected?	• Check if the power cord is correctly plugged into the power outlet. • Check whether the circuit breaker has been connected properly. The switch of the circuit breaker must be set to on (red). • When operating in below zero temperature, the enclosure may not work for up to one hour to raise the internal temperature of the enclosure.
Does the “Invalid Format” message appear?	• The signal from the PC (Graphics card) is out of the vertical or horizontal frequency range of the product. Adjust the frequency range by referring to the Specifications in this manual.
Does the “No Signal” message appear?	• The signal cable between PC and product is not connected. Check the signal cable. • Access the input menu to check the input signal.

The Unknown Product message appears when the product is connected.

Problem	Action
Did you install the driver?	• Check if the Plug and Play function is supported by referring to the graphics card user manual.

The screen image looks abnormal.

Problem	Action
Is the screen position wrong?	• Check if the graphics card resolution and frequency are supported by the product. If the frequency is out of range, set to the recommended resolution in the [Control Panel] → [Display] → [Setting] menu. (The settings may differ depending on your operating system.)
The screen is displayed abnormally.	• The proper input signal is not connected to the signal port. Connect the signal cable that matches with the source input signal. • Condensation may appear on the screen. It will disappear in a certain period of time after the product is powered on. - The condensation formed inside the product is a natural phenomenon and is not covered under warranty. (IPX6 is a standard to protect the product from 100L of water per minute and not from infiltration of moisture in the air into the set.)
The screen's brightness seems dark.	• Change the screen brightness settings. • Check the Easy Brightness Control settings. • If the internal temperature of the enclosure rises, the screen's brightness may darken. Make sure to regularly clean the heat exchanger within the enclosure.

After-image appears on the product.

Problem	Action
After-image appears when the product is turned off.	• If you use a fixed image for a long time, the pixels may be damaged. Use the screen-saver function. • When a dark image is displayed on the screen after an image with high contrast (black and white or gray), this may cause image sticking. This is normal for LCD screen products.

The audio function does not work.

Problem	Action
No sound?	• See if the audio cable is connected properly. • Adjust the volume. • See if the sound is set properly.
Sound is too dull.	• Select the appropriate equalizer sound.
Sound is too low.	• Adjust the volume.

Screen color is abnormal.

Problem	Action
Screen has poor color resolution (16 colors).	• Set the number of colors to more than 24 bits (true color). Select [Control Panel] → [Display] → [Settings] → [Color Table] in Windows. (The settings may differ depending on your operating system.)
Screen color is unstable or mono-colored.	• Check the connection status of the signal cable. Or, re-insert the PC graphics card.
Do black spots appear on the screen?	• Several pixels (red, green, blue, white, or black color) may appear on the screen, which can be attributable to the unique characteristics of the LCD panel. This is not a malfunction of the LCD.

The operation does not work normally.

Problem	Action
The power suddenly turned off.	• Is the Timer set? • Check the power control settings. Power interrupted. • Check whether the circuit breaker has been connected properly. The switch of the circuit breaker must be set to on (red). • If the internal temperature of the enclosure rises, the power may shut down. Make sure to regularly clean the heat exchanger within the enclosure.

⚠ CAUTION

- Image sticking does not occur when using constantly changing images but may occur when using a fixed image for an extended period of time. Therefore, it is recommended that you use the instructions below to decrease the likelihood of image sticking occurring when using a fixed image. It is recommended that you change the screen at least once every 12 hours at the very minimum; if done more frequently, the prevention of image sticking is more effective.

Recommended operating conditions

1 Change the background and the character colors using the same time interval.

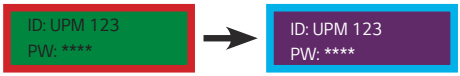

When changing colors, using complementary colors helps to prevent image sticking.

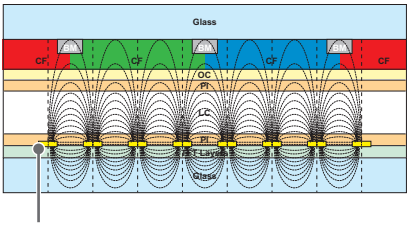

2 Change the image using the same time interval.

Make sure that the characters or images before changing the image remain in the same location after changing the image.

What is image sticking?

When the LCD panel displays a static image for an extended period of time, it can cause a voltage difference between the electrodes that operate the liquid crystals. When the voltage difference between the electrodes builds up over time, liquid crystals have a tendency to remain aligned in one direction. During this process, a previously displayed image remains visible. This phenomenon is referred to as image sticking.

PRODUCT SPECIFICATIONS

The product specifications below may be changed without prior notice due to upgrade of product functions.
" ~ " refers to alternating current (AC), and " ⎓ " refers to direct current (DC).

LCD screen	Screen type	Thin Film Transistor (TFT) Liquid Crystal Display (LCD) Screen	
Video signal	Maximum resolution	55XE3C	1920 × 1080 @ 60 Hz
		75XE3C	HDMI / DisplayPort : 3840 × 2160 @ 60 Hz DVI-D : 1920 × 1080 @ 60 Hz
		- This may not be supported on some OS or graphics card types.	
	Recommended resolution	55XE3C	1920 × 1080 @ 60 Hz
		75XE3C	HDMI / DisplayPort : 3840 × 2160 @ 60 Hz DVI-D : 1920 × 1080 @ 60 Hz
		- This may not be supported on some OS or graphics card types.	
	Horizontal frequency	HDMI / DVI-D / DisplayPort	55XE3C : 30 kHz to 83 kHz
			75XE3C : 30 kHz to 135 kHz
	Vertical frequency	HDMI / DVI-D / DisplayPort	55XE3C : 56 Hz to 60 Hz
			75XE3C : 30 Hz to 60.31 Hz
	Synchronization	Digital	
Input / Output ports	When installing the media player inside	RS-232C IN/OUT, SPEAKER OUT, HDMI IN, DP IN/OUT, DVI-D IN, SD, USB 3.0 IN, AUDIO IN, LAN	
	When installing the media player / PC outside	HDMI IN, USB 3.0 IN, LAN	
Embedded battery		Applied	
Environmental Conditions	Operating Temperature	-30 °C to 50 °C	
	Operating Humidity	5 % to 100 %	
	Storage Temperature	-20 °C to 60 °C	
	Storage Humidity	5 % to 100 %	

55XE3C		
LCD Panel	Pixel Pitch	0.630 mm (H) x 0.630 mm (V)
Power	Rated Voltage	AC 100-240 V ~ 50/60 Hz 5.3 A
	Power Consumption	On Mode: 350 W (Typ) / 500 W (Max) Sleep Mode (DVI-D, HDMI, DISPLAYPORT): ≤ 1.0 W Off Mode: ≤ 0.5 W
Dimensions (Width x Height x Depth) / Weight	745.3 mm x 1345.4 mm x 160.0 mm / 70.0 kg	

75XE3C		
LCD Panel	Pixel Pitch	0.429 mm (H) X 0.429 mm (V)
Power	Rated Voltage	AC 200-240 V~ 50/60 Hz 5.7 A
	Power Consumption	On Mode: 700 W (Typ) / 1000 W (Max) Sleep Mode (DVI-D, HDMI, DISPLAYPORT): ≤ 1.0 W Off Mode: ≤ 0.5 W
Dimensions (Width x Height x Depth) / Weight	1075.6 mm x 1991.6 mm x 219 mm / 180 kg	

HDMI / DVI-D / DisplayPort (PC) Support Mode

Resolution	Horizontal frequency (kHz)	Vertical frequency (Hz)	Remark
640 x 480	31.469	59.94	
800 x 600	37.879	60.317	
1024 x 768	48.363	60	
1280 x 720	44.772	59.855	
1366 x 768	47.712	60	
1280 x 1024	63.981	60.02	
1680 x 1050	65.290	59.954	
1920 x 1080	67.5	60	
3840 x 2160	67.5	30	Only 75XE3C (HDMI / DisplayPort)
3840 x 2160	135	60	Only 75XE3C (HDMI / DisplayPort)

HDMI / DisplayPort (DTV) mode

Resolution	Horizontal frequency (kHz)	Vertical frequency (Hz)	Remark
480/60p	31.5	60	
576/50p	31.25	50	
720/50p	37.5	50	
720/60p	45	60	
1080/50i	28.1	50	
1080/60i	33.75	60	
1080/50p	56.25	50	
1080/60p	67.5	60	
2160/30p	67.5	30	Only 75XE3C
2160/50p	112.5	50	Only 75XE3C
2160/60p	135	60	Only 75XE3C

NOTE

- When using HDMI/DVI-D/DisplayPort inputs, PC and DTV resolutions can be adjusted in the Input Label.
- Vertical frequency: The product display functions by the screen image changing dozens of times every second like a fluorescent lamp.

  The vertical frequency or refresh rate is the number of image displays per second. The unit is Hz.
- Horizontal frequency: The horizontal interval is the time taken to display one horizontal line. When 1 is divided by the horizontal interval, the number of horizontal lines displayed every second can be tabulated as the horizontal frequency. The unit is kHz.

Make sure to read the Safety Precautions before using the product.
The model and serial numbers of the SET are located on the back and one side of the SET. Record it below should you ever need service.

MODEL _____

SERIAL _____

Temporary noise is normal when powering ON or OFF this device.